multiind

Power	**2,5 – 75 kvar**
Reactor factor	**5.5, 7 or 8 %** **12.5 or 14 %**

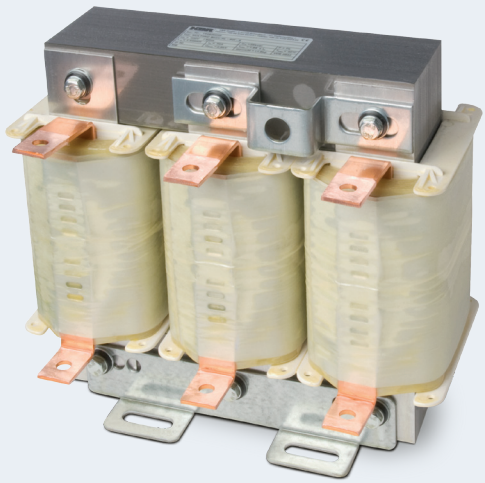

Filter circuit reactors for reactive current compensation

Highlights

- Power values from 2.5 to 75 kvar
- High linearity, low power dissipation
- Overload protection through temperature switch
- Low-noise through impregnation
- Long working life
- Improvement of impedance behavior

An overall view of the **technical data** can be found on pages 124/125.
Construction diagrams can be found on page 123.

Note on the temperature switch
For a trouble-free function and long working life, the in-built temperature sensor must interrupt the main circuit of the filter circuit reactor.

Note on assembly
- Observe the applicable DIN/VDE regulations.
- Network connection, setup and operation of a device only by qualified personnel.
- Stay within the maximum current, voltage and temperature range.
- Ensure sufficient ventilation.
- Tighten connections with torque.

multiind

Specifications multiind-basic ... 5.5 %

Reactor factor: **5.5 %** Resonance frequency: **214 Hz**

POWER	TYPE multiind-basic ... 5.5 %			INDUCTIVITY	RATED CURRENT	DIMENSIONS in mm						CONNECTION			DIAGRAM	WEIGHT	CAPACITY	CAPACITOR multicond
kvar		Cu	Al	mH	A	H	W	D	W1	W2	LL	L	AW	RK		kg	µF	UHPC ... -440-3P
2,5	multiind-basic 400-02.5-5.5-Cu-L-S	x		11,15	3,6	165	180	86	95	62,5	9	x			A	5,3	3 x 16,7	3.0
5	multiind-basic 400-05.0-5.5-Cu-L-S	x		5,57	7,2	165	180	106	95	82,5	9	x			A	6,8	3 x 33,3	6.0
7,5	multiind-basic 400-07.5-5.5-Cu-L-S	x		3,74	10,8	165	180	106	95	83	9	x			A	9,6	3 x 49,7	9.0
10	multiind-basic 400-10.0-5.5-Cu-L-S	x		2,80	14,4	195	210	109	95	86	9	x			A	12,9	3 x 66,3	12.1
12,5	multiind-basic 400-12.5-5.5-Cu-L-S	x		2,24	18	220	240	95	95	71	9	x			A	14,5	3 x 83,0	15.1
15	multiind-basic 400-15.0-5.5-Cu-L-S	x		1,98	21,6	220	240	105	95	81	9	x			A	16,8	3 x 93,7	17.1
20	multiind-basic 400-20.0-5.5-Cu-L-S	x		1,40	28,8	220	240	125	95	81	9	x			A	18,5	3 x 132,7	24.2
25	multiind-basic 400-25.0-5.5-Cu-L-S	x		1,21	36	220	240	135	95	91	9	x			A	21	3 x 154,0	28,1
30	multiind-basic 400-30.0-5.5-Cu-L-S	x		0,99	43,2	220	240	125	95	81	9	x			A	19,4	3 x 187,3	2 x 17.1
40	multiind-basic 400-40.0-5.5-Cu-L-S	x		0,75	57,6	220	240	135	95	91	9	x			A	22,3	3 x 249,0	1 x 21.1 + 1 x 24.2
50	multiind-basic 400-50.0-5.5-Cu-L-S	x		0,60	72	270	300	107	95	82	9	x			A	28,5	3 x 307,0	2 x 28.1
60	multiind-basic 400-60.0-5.5-Cu-L-S	x		0,51	86,4	270	300	145	95	145	9	x			A	36	3 x 364,7	1 x 6.1 + 2 x 30.3
75	multiind-basic 400-75.0-5.5-Cu-L-S	x		0,40	108	270	300	150	95	107	9	x			A	40,4	3 x 461,7	3 x 28.1

Specifications multiind-light ... 7 %

Reactor factor: **7 %** Resonance frequency: **189 Hz**

POWER	TYPE multiind-light ... 7%			INDUCTIVITY	RATED CURRENT	DIMENSIONS in mm						CONNECTION			DIAGRAM	WEIGHT	CAPACITY	CAPACITOR multicond
kvar		Cu	Al	mH	A	H	W	D	W1	W2	LL	L	AW	RK		kg	µF	UHPC ... -440-3P
2,5	multiind-light 400-02.5-7-Cu-L-S	x		14,19	3,6	165	180	86	95	62,5	9	x			A	5,1	3 x 16,7	3.0
5	multiind-light 400-05.0-7-Cu-L-S	x		7,09	7,2	165	180	86	95	62,5	9	x			A	6,1	3 x 33,3	6.0
7,5	multiind-light 400-07.5-7-Cu-L-S	x		4,76	10,8	165	180	96	95	72,5	9	x			A	7,8	3 x 49,7	9.0
10	multiind-light 400-10.0-7-Cu-L-S	x		3,56	14,4	165	180	106	95	82,5	9	x			A	9,2	3 x 66,3	12.1
12,5	multiind-light 400-12.5-7-Cu-L-S	x		2,85	18	195	210	109	95	86	9	x			A	12,4	3 x 83,0	15.1
15	multiind-light 400-15.0-7-Cu-L-S	x		2,52	21,6	195	210	109	95	86	9	x			A	12,9	3 x 93,7	17.1
20	multiind-light 400-20.0-7-Cu-L-S	x		1,78	28,8	195	210	109	95	86	9	x			A	14,0	3 x 132,7	24.2
25	multiind-light 400-25.0-7-Cu-L-S	x		1,54	36	220	240	115	95	91	9	x			A	19,1	3 x 154,0	28,1
25	multiind-light 400-25.0-7-Al-AW-S		x	1,54	36	220	240	145	95	91	9		x		C	17,4	3 x 154,0	28,1
30	multiind-light 400-30.0-7-Cu-L-S	x		1,26	43,2	220	240	135	95	91	9	x			A	20,2	3 x 187,3	2 x 17.1
30	multiind-light 400-30.0-7-Al-AW-S		x	1,26	43,2	220	240	145	95	91	9		x		C	17,4	3 x 187,3	2 x 17.1
40	multiind-light 400-40.0-7-Cu-L-S	x		0,95	57,6	220	240	145	95	101	9	x			A	35,0	3 x 248,7	1 x 21.2 + 1 x 24.2
40	multiind-light 400-40.0-7-Al-AW-S		x	0,95	57,6	240	260	167	95	112	9		x		C	27,0	3 x 248,7	1 x 21.2 + 1 x 24.2
50	multiind-light 400-50.0-7-Cu-L-S	x		0,77	72	270	300	145	95	95	9	x			A	32,0	3 x 308,0	2 x 28.1
50	multiind-light 400-50.0-7-Al-AW-S		x	0,77	72	240	260	167	95	112	9		x		C	26,0	3 x 308,0	2 x 28.1
60	multiind-light 400-60.0-7-Cu-L-S	x		0,65	86,4	270	300	145	95	95	9	x			A	39,4	3 x 364,7	1 x 6.1 + 2 x 30.3
60	multiind-light 400-60.0-7-Al-AW-S		x	0,65	86,4	270	300	180	95	95	9		x		C	36,0	3 x 364,7	1 x 6.1 + 2 x 30.3
75	multiind-light 400-75.0-7-Cu-L-S	x		0,51	108	270	300	180	95	122	9	x			A	47,1	3 x 461,7	3 x 28.1
75	multiind-light 400-75.0-7-Al-AW-S		x	0,51	108	270	300	180	95	122	9		x		C	36,0	3 x 461,7	3 x 28.1

multiind

Specifications multiind-basic ... 7 %

Reactor factor: **7 %** Resonance frequency: **189 Hz**

POWER	TYPE multiind-basic ... 7%			INDUCTIVITY	RATED CURRENT	DIMENSIONS in mm						CONNECTION			DIAGRAM	WEIGHT	CAPACITY	CAPACITOR multicond
kvar		Cu	Al	mH	A	H	W	D	W1	W2	LL	L	AW	RK		kg	µF	UHPC ... -440-3P
2,5	multiind-basic 400-02.5-7-Cu-L-S	x		14,19	3,6	165	180	86	95	62,5	9	x			A	5,1	3 x 16,7	3.0
5	multiind-basic 400-05.0-7-Cu-L-S	x		7,09	7,2	165	180	86	95	62,5	9	x			A	6,1	3 x 33,3	6.0
7,5	multiind-basic 400-07.5-7-Cu-L-S	x		4,76	10,8	165	180	96	95	72,5	9	x			A	7,8	3 x 49,7	9.0
10	multiind-basic 400-10.0-7-Cu-L-S	x		3,56	14,4	165	180	106	95	82,5	9	x			A	9,2	3 x 66,3	12.1
12,5	multiind-basic 400-12.5-7-Cu-L-S	x		2,85	18	195	210	109	95	86	9	x			A	12,4	3 x 83,0	15.1
15	multiind-basic 400-15.0-7-Cu-L-S	x		2,52	21,6	195	210	109	95	86	9	x			A	12,9	3 x 93,7	17.1
20	multiind-basic 400-20.0-7-Cu-L-S	x		1,78	28,8	220	240	105	95	81	9	x			A	14,0	3 x 132,7	24.2
25	multiind-basic 400-25.0-7-Cu-L-S	x		1,54	36	220	240	115	95	91	9	x			A	19,1	3 x 154,0	28,1
25	multiind-basic 400-25.0-7-Al-AW-S		x	1,54	36	220	240	145	95	91	9		x		C	17,4	3 x 154,0	28,1
30	multiind-basic 400-30.0-7-Cu-L-S	x		1,26	43,2	220	240	135	95	91	9	x			A	20,2	3 x 187,3	2 x 17.1
30	multiind-basic 400-30.0-7-Al-AW-S		x	1,26	43,2	220	240	145	95	91	9		x		C	17,4	3 x 187,3	2 x 17.1
40	multiind-basic 400-40.0-7-Cu-L-S	x		0,95	57,6	220	240	145	95	101	9	x			A	35,0	3 x 248,7	1 x 21.2 + 1 x 24.2
40	multiind-basic 400-40.0-7-Al-AW-S		x	0,95	57,6	240	260	167	95	112	9		x		C	27,0	3 x 248,7	1 x 21.2 + 1 x 24.2
50	multiind-basic 400-50.0-7-Cu-L-S	x		0,77	72	270	300	145	95	95	9	x			A	32,0	3 x 308,0	2 x 28.1
50	multiind-basic 400-50.0-7-Al-AW-S		x	0,77	72	240	260	167	95	112	9		x		C	26,0	3 x 308,0	2 x 28.1
60	multiind-basic 400-60.0-7-Cu-L-S	x		0,65	86,4	270	300	145	95	95	9	x			A	39,4	3 x 364,7	1 x 6.1 + 2 x 30.3
60	multiind-basic 400-60.0-7-Al-AW-S		x	0,65	86,4	270	300	180	95	95	9		x		C	36,0	3 x 364,7	1 x 6.1 + 2 x 30.3
75	multiind-basic 400-75.0-7-Cu-L-S	x		0,51	108	270	300	180	95	122	9	x			A	47,1	3 x 461,7	3 x 28.1
75	multiind-basic 400-75.0-7-Al-AW-S		x	0,51	108	270	300	180	95	122	9		x		C	36,0	3 x 461,7	3 x 28.1

Specifications multiind-light ... 8 %

Reactor factor: **8 %** Resonance frequency: **177 Hz**

POWER	TYPE multiind-light ... 8%			INDUCTIVITY	RATED CURRENT	DIMENSIONS in mm						CONNECTION			DIAGRAM	WEIGHT	CAPACITY	CAPACITOR multicond
kvar		Cu	Al	mH	A	H	W	D	W1	W2	LL	L	AW	RK		kg	µF	UHPC ... -440-3P
2,5	multiind-light 400-02.5-8-Cu-L-S	x		16,21	3,6	165	180	86	95	62,5	9	x			A	5,1	3 x 16,7	3.0
5	multiind-light 400-05.0-8-Cu-L-S	x		8,11	7,2	165	180	86	95	62,5	9	x			A	6,1	3 x 33,3	6.0
7,5	multiind-light 400-07.5-8-Cu-L-S	x		5,44	10,8	165	180	96	95	72,5	9	x			A	7,8	3 x 49,7	9.0
10	multiind-light 400-10.0-8-Cu-L-S	x		4,07	14,4	195	210	92	95	68,5	9	x			A	9,2	3 x 66,3	12.1
12,5	multiind-light 400-12.5-8-Cu-L-S	x		3,26	18	195	210	109	95	86	9	x			A	12,4	3 x 83,0	15.1
15	multiind-light 400-15.0-8-Cu-L-S	x		2,88	21,6	195	210	109	95	86	9	x			A	12,7	3 x 93,7	17.1
20	multiind-light 400-20.0-8-Cu-L-S	x		2,04	28,8	220	240	105	95	81	9	x			A	14,0	3 x 132,7	24.2
25	multiind-light 400-25.0-8-Cu-L-S	x		1,75	36	220	240	115	95	91	9	x			A	19,1	3 x 154,0	28,1
30	multiind-light 400-30.0-8-Cu-L-S	x		1,44	43,2	220	240	135	95	91	9	x			A	20,3	3 x 187,3	2 x 17.1
30	multiind-light 400-30.0-8-Al-AW-S		x	1,44	43,2	220	240	145	95	91	9		x		C	18,1	3 x 187,3	2 x 17.1
40	multiind-light 400-40.0-8-Cu-L-S	x		1,09	57,6	220	240	155	95	105	9	x			A	25,0	3 x 248,7	1 x 21.2 + 1 x 24.2
40	multiind-light 400-40.0-8-Al-AW-S		x	1,09	57,6	220	240	185	95	105	9		x		C	27,0	3 x 248,7	1 x 21.2 + 1 x 24.2
50	multiind-light 400-50.0-8-Cu-L-S	x		0,88	72	270	300	145	95	95	9	x			A	32,0	3 x 308,0	2 x 28.1
50	multiind-light 400-50.0-8-Al-AW-S		x	0,88	72	240	260	167	95	112	9		x		C	26,0	3 x 308,0	2 x 28.1
60	multiind-light 400-60.0-8-Cu-L-S	x		0,74	86,4	270	300	145	95	95	9	x			A	39,4	3 x 364,7	1 x 6.1 + 2 x 30.3
60	multiind-light 400-60.0-8-Al-AW-S		x	0,74	86,4	270	300	210	95	122	9		x		C	36,0	3 x 364,7	1 x 6.1 + 2 x 30.3
75	multiind-light 400-75.0-8-Cu-L-S	x		0,59	108	270	300	180	95	122	9	x			A	47,1	3 x 461,7	3 x 28.1
75	multiind-light 400-75.0-8-Al-AW-S		x	0,59	108	270	300	210	95	122	9		x		C	36,0	3 x 461,7	3 x 28.1

multiind

Specifications multiind-basic ... 8 %

Reactor factor: **8 %** Resonance frequency: **177 Hz**

POWER	TYPE multiind-basic ... 8 %			INDUCTIVITY	RATED CURRENT	DIMENSIONS in mm						CONNECTION			DIA-GRAM	WEIGHT	CAPACITY	CAPACITOR multicond
kvar		Cu	Al	mH	A	H	W	D	W1	W2	LL	L	AW	RK		kg	µF	UHPC ... -440-3P
2,5	multiind-basic 400-02.5-8-Cu-L-S	x		16,21	3,6	165	180	86	95	62,5	9	x			A	5,1	3 x 16,7	3.0
5	multiind-basic 400-05.0-8-Cu-L-S	x		8,11	7,2	165	180	86	95	62,5	9	x			A	6,1	3 x 33,3	6.0
7,5	multiind-basic 400-07.5-8-Cu-L-S	x		5,44	10,8	165	180	96	95	72,5	9	x			A	7,8	3 x 49,7	9.0
10	multiind-basic 400-10.0-8-Cu-L-S	x		4,07	14,4	195	210	92	95	68,5	9	x			A	9,2	3 x 66,3	12.1
12,5	multiind-basic 400-12.5-8-Cu-L-S	x		3,26	18	195	210	109	95	86	9	x			A	12,4	3 x 83,0	15.1
15	multiind-basic 400-15.0-8-Cu-L-S	x		2,88	21,6	195	210	109	95	86	9	x			A	12,7	3 x 93,7	17.1
20	multiind-basic 400-20.0-8-Cu-L-S	x		2,04	28,8	195	210	109	95	86	9	x			A	14,0	3 x 132,7	24.2
25	multiind-basic 400-25.0-8-Cu-L-S	x		1,75	36	220	240	115	95	91	9	x			A	19,1	3 x 154,0	28,1
30	multiind-basic 400-30.0-8-Cu-L-S	x		1,44	43,2	220	240	135	95	91	9	x			A	20,3	3 x 187,3	2 x 17.1
30	multiind-basic 400-30.0-8-Al-AW-S		x	1,44	43,2	220	240	145	95	91	9		x		C	18,1	3 x 187,3	2 x 17.1
40	multiind-basic 400-40.0-8-Cu-L-S	x		1,09	57,6	220	240	155	95	105	9	x			A	25,0	3 x 248,7	1 x 21.2 + 1 x 24.2
40	multiind-basic 400-40.0-8-Al-AW-S		x	1,09	57,6	220	240	185	95	105	9		x		C	27,0	3 x 248,7	1 x 21.2 + 1 x 24.2
50	multiind-basic 400-50.0-8-Cu-L-S	x		0,88	72	270	300	145	95	95	9	x			A	32,0	3 x 308,0	2 x 28.1
50	multiind-basic 400-50.0-8-Al-AW-S		x	0,88	72	240	260	167	95	112	9		x		C	26,0	3 x 308,0	2 x 28.1
60	multiind-basic 400-60.0-8-Cu-L-S	x		0,74	86,4	270	300	145	95	95	9	x			A	39,4	3 x 364,7	1 x 6.1 + 2 x 30.3
60	multiind-basic 400-60.0-8-Al-AW-S		x	0,74	86,4	270	300	210	95	122	9		x		C	36,0	3 x 364,7	1 x 6.1 + 2 x 30.3
75	multiind-basic 400-75.0-8-Cu-L-S	x		0,59	108	270	300	180	95	122	9	x			A	47,1	3 x 461,7	3 x 28.1
75	multiind-basic 400-75.0-8-Al-AW-S		x	0,59	108	270	300	210	95	122	9		x		C	36,0	3 x 461,7	3 x 28.1

Specifications multiind-basic ... 12.5 %

Reactor factor: **12.5 %** Resonance frequency: **142 Hz**

POWER	TYPE multiind-basic ... 12.5 %			INDUCTIVITY	RATED CURRENT	DIMENSIONS in mm						CONNECTION			DIA-GRAM	WEIGHT	CAPACITY	CAPACITOR multicond
kvar		Cu	Al	mH	A	H	W	D	W1	W2	LL	L	AW	RK		kg	µF	UHPC ... -525-3P
2,5	multiind-basic 400-02.5-12.5-Cu-L-S	x		27,53	3,6	165	180	86	95	62,5	9	x			A	5,3	3 x 15,3	4.0
5	multiind-basic 400-05.0-12.5-Cu-L-S	x		13,77	7,2	165	180	86	95	72,5	9	x			A	8,7	3 x 30,7	8.0
7,5	multiind-basic 400-07.5-12.5-Cu-L-S	x		8,44	10,8	195	210	92	95	68,5	9	x			A	9,9	3 x 50,0	13.0
10	multiind-basic 400-10.0-12.5-Cu-L-S	x		7,32	14,4	195	210	109	95	86	9	x			A	14,0	3 x 57,7	15.0
12,5	multiind-basic 400-12.5-12.5-Cu-L-S	x		6,089	18	220	240	95	95	71	9	x			A	15,1	3 x 69,3	18.0
15	multiind-basic 400-15.0-12.5-Cu-L-S	x		5,23	21,6	220	240	95	95	71	9	x			A	15,1	3 x 80,7	21.0
20	multiind-basic 400-20.0-12.5-Cu-L-S	x		3,65	28,8	220	240	125	95	101	9	x			A	23,9	3 x 115,7	30.0
20	multiind-basic 400-20.0-12.5-Al-AW-S		x	3,65	28,8	240	260	167	95	112	9		X		C	23,2	3 x 115,7	30.0
25	multiind-basic 400-25.0-12.5-Cu-L-S	x		2,97	36	220	240	145	95	101	9	x			A	24,7	3 x 142,3	37.0
25	multiind-basic 400-25.0-12.5-Al-AW-S		x	2,97	36	240	260	167	95	112	9		x		C	26,7	3 x 142,3	37.0
30	multiind-basic 400-30.0-12.5-Cu-L-S	x		2,44	43,2	220	240	145	95	101	9	x			A	24,7	3 x 173,3	1 x 15.0 + 1 x 30.0
30	multiind-basic 400-30.0-12.5-Al-AW-S		x	2,44	43,2	240	260	167	95	112	9		x		C	25,7	3 x 173,3	1 x 15.0 + 1 x 30.0
40	multiind-basic 400-40.0-12.5-Cu-L-S	x		1,83	57,6	270	300	145	95	95	9	x			A	39,4	3 x 231,0	2 x 30.0
40	multiind-basic 400-40.0-12.5-Al-AW-S		x	1,83	57,6	270	300	180	95	107	9		x		C	36,2	3 x 231,0	2 x 30.0
50	multiind-basic 400-50.0-12.5-Cu-L-S	x		1,48	72	270	300	150	95	107	9	x			A	45,9	3 x 284,7	2 x 37.0
50	multiind-basic 400-50.0-12.5-Al-AW-S		x	1,48	72	270	300	210	95	112	9		x		C	41,3	3 x 284,7	2 x 37.0
60	multiind-basic 400-60.0-12.5-Cu-L-S	x		1,22	86,4	270	300	180	95	112	9	x			A	48,6	3 x 346,7	3 x 30.0
75	multiind-basic 400-75.0-12.5-Cu-L-S	x		0,91	108	270	300	180	95	122	9	x			A	50,0	3 x 462,0	3 x 37.0

multiind

Specifications multiind-light ... 14 %

Reactor factor: **14 %** Resonance frequency: **134 Hz**

POWER	TYPE multiind-light ... 14%			INDUCTIVITY	RATED CURRENT	DIMENSIONS in mm						CONNECTION			DIA-GRAM	WEIGHT	CAPACITY	CAPACITOR multicond
kvar		Cu	Al	mH	A	H	W	D	W1	W2	LL	L	AW	RK		kg	µF	UHPC ... -525-3P
2,5	multiind-light 400-02.5-14-Cu-L-S	x		30,84	3,6	165	180	86	95	62,5	9	x			A	5,3	3 x 15,3	4.0
5	multiind-light 400-05.0-14-Cu-L-S	x		15,42	7,2	165	180	96	95	72,5	9	x			A	8,3	3 x 30,7	8.0
7,5	multiind-light 400-07.5-14-Cu-L-S	x		9,46	10,8	195	210	109	95	86	9	x			A	13,4	3 x 50,0	13.0
10	multiind-light 400-10.0-14-Cu-L-S	x		8,20	14,4	195	210	109	95	86	9	x			A	14,1	3 x 57,7	15.0
12,5	multiind-light 400-12.5-14-Cu-L-S	x		6,82	18	220	240	105	95	81	9	x			A	16,9	3 x 69,3	18.0
15	multiind-light 400-15.0-14-Cu-L-S	x		5,86	21,6	220	240	105	95	81	9	x			A	17,9	3 x 80,7	21.0
20	multiind-light 400-20.0-14-Cu-L-S	x		4,09	28,8	220	240	125	95	101	9	x			A	24,3	3 x 115,7	30.0
25	multiind-light 400-25.0-14-Cu-L-S	x		3,32	36	220	240	145	95	101	9	x			A	24,2	3 x 142,3	37.0
25	multiind-light 400-25.0-14-Al-AW-S		x	3,32	36	240	260	167	95	112	9		x		C	24,9	3 x 142,3	37.0
30	multiind-light 400-30.0-14-Cu-L-S	x		2,73	43,2	220	240	145	95	101	9	x			A	24,6	3 x 173,3	1 x 15.0 + 1 x 30.0
30	multiind-light 400-30.0-14-Al-AW-S		x	2,73	43,2	240	260	167	95	112	9		x		C	23,9	3 x 173,3	1 x 15.0 + 1 x 30.0
40	multiind-light 400-40.0-14-Cu-L-S	x		2,05	57,6	270	300	145	95	95	9	x			A	37,1	3 x 231,0	2 x 30.0
40	multiind-light 400-40.0-14-Al-AW-S		x	2,05	57,6	270	300	180	95	107	9		x		C	36,2	3 x 231,0	2 x 30.0
50	multiind-light 400-50.0-14-Cu-L-S	x		1,66	72	270	300	150	95	107	9	x			A	46,5	3 x 284,7	2 x 37.0
50	multiind-light 400-50.0-14-Al-AW-S		x	1,66	72	270	300	210	95	112	9		x		C	39,0	3 x 284,7	2 x 37.0
60	multiind-light 400-60.0-14-Cu-L-S	x		1,36	86,4	270	300	180	95	112	9	x			A	50,0	3 x 346,7	3 x 30.0
75	multiind-light 400-75.0-14-Cu-L-S	x		1,11	108	270	300	180	95	122	9	x			A	50,0	3 x 462,0	3 x 37.0

Specifications multiind-basic ... 14 %

Reactor factor: **14 %** Resonance frequency: **134 Hz**

POWER	TYPE multiind-basic ... 14%			INDUCTIVITY	RATED CURRENT	DIMENSIONS in mm						CONNECTION			DIA-GRAM	WEIGHT	CAPACITY	CAPACITOR multicond
kvar		Cu	Al	mH	A	H	W	D	W1	W2	LL	L	AW	RK		kg	µF	UHPC ... -525-3P
2,5	multiind-basic 400-02.5-14-Cu-L-S	x		30,84	3,6	165	180	86	95	62,5	9	x			A	5,3	3 x 15,3	4.0
5	multiind-basic 400-05.0-14-Cu-L-S	x		15,42	7,2	165	180	96	95	72,5	9	x			A	8,3	3 x 30,7	8.0
7,5	multiind-basic 400-07.5-14-Cu-L-S	x		9,46	10,8	195	210	109	95	86	9	x			A	13,4	3 x 50,0	13.0
10	multiind-basic 400-10.0-14-Cu-L-S	x		8,20	14,4	195	210	109	95	86	9	x			A	14,1	3 x 57,7	15.0
12,5	multiind-basic 400-12.5-14-Cu-L-S	x		5,86	18	220	240	105	95	81	9	x			A	16,9	3 x 80,7	21.0
15	multiind-basic 400-15.0-14-Cu-L-S	x		5,86	21,6	220	240	105	95	81	9	x			A	17,9	3 x 80,7	21.0
20	multiind-basic 400-20.0-14-Cu-L-S	x		4,09	28,8	220	240	125	95	101	9	x			A	24,3	3 x 115,7	30.0
25	multiind-basic 400-25.0-14-Cu-L-S	x		3,32	36	220	240	145	95	101	9	x			A	24,2	3 x 142,3	37.0
25	multiind-basic 400-25.0-14-Al-AW-S		x	3,32	36	240	260	167	95	112	9		x		C	24,9	3 x 142,3	37.0
30	multiind-basic 400-30.0-14-Cu-L-S	x		2,73	43,2	220	240	145	95	101	9	x			A	24,6	3 x 173,3	1 x 15.0 + 1 x 30.0
30	multiind-basic 400-30.0-14-Al-AW-S		x	2,73	43,2	240	260	167	95	112	9		x		C	23,9	3 x 173,3	1 x 15.0 + 1 x 30.0
40	multiind-basic 400-40.0-14-Cu-L-S	x		2,05	57,6	270	300	145	95	95	9	x			A	37,1	3 x 231,0	2 x 30.0
40	multiind-basic 400-40.0-14-Al-AW-S		x	2,05	57,6	270	300	180	95	107	9		x		C	36,2	3 x 231,0	2 x 30.0
50	multiind-basic 400-50.0-14-Cu-L-S	x		1,66	72	270	300	150	95	107	9	x			A	46,5	3 x 284,7	2 x 37.0
50	multiind-basic 400-50.0-14-Al-AW-S		x	1,66	72	270	300	210	95	112	9		x		C	39,0	3 x 284,7	2 x 37.0
60	multiind-basic 400-60.0-14-Cu-L-S	x		1,36	86,4	270	300	180	95	112	9	x			A	50,0	3 x 346,7	3 x 30.0
75	multiind-basic 400-75.0-14-Cu-L-S	x		1,11	108	270	300	180	95	122	9	x			A	50,0	3 x 462,0	3 x 37.0

multiind

Construction diagrams

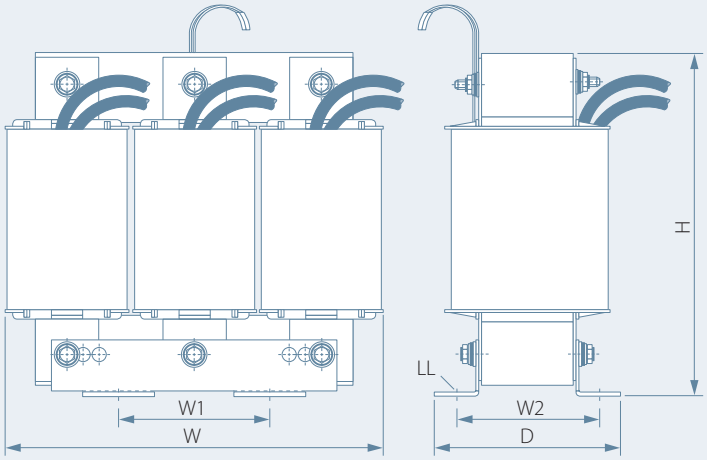

Diagram A

Design with connection leads
Type L

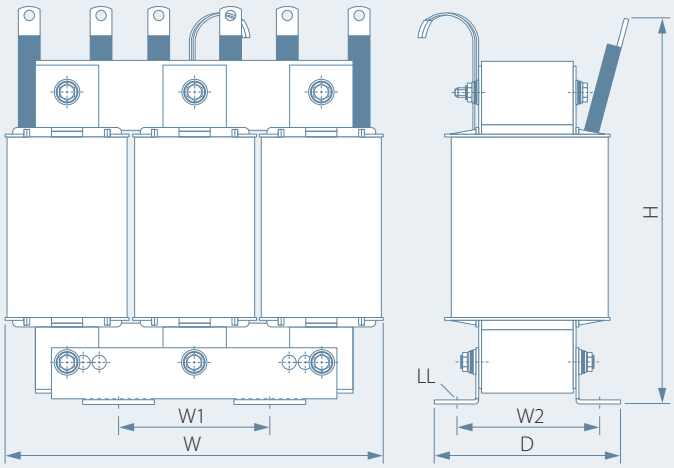

Diagram B

Design with tubular cable socket
Type RK

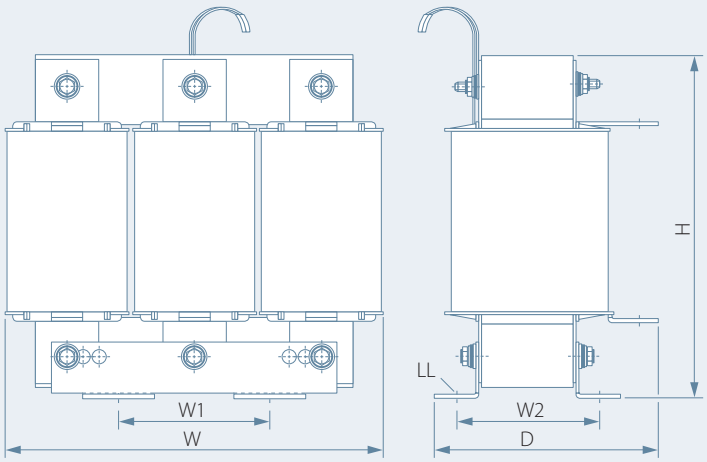

Diagram C

Design with elbow coupling
Type AW

Not suitable for taking measurements.