KBR Energy Management

Filter circuit reactors

multiind 60Hz

multiind filter circuit reactors are suitable for constructing detuned reactive current compensation units to prevent resonance phenomena through harmonics.
High linearities here guarantee a functional stability even in the overload area.

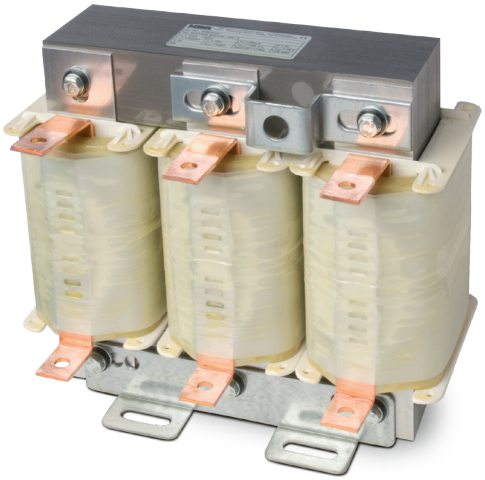

Filter circuit reactors for reactive current compensation

Highlights

- High linearity, low power dissipation
- Overload protection through temperature switch
- Low-noise through impregnation
- Long working life
- Improvement of impedance behavior

EDEPRO0157-2113-1_EN_data sheet multiind 60Hz

multiind

Construction diagrams

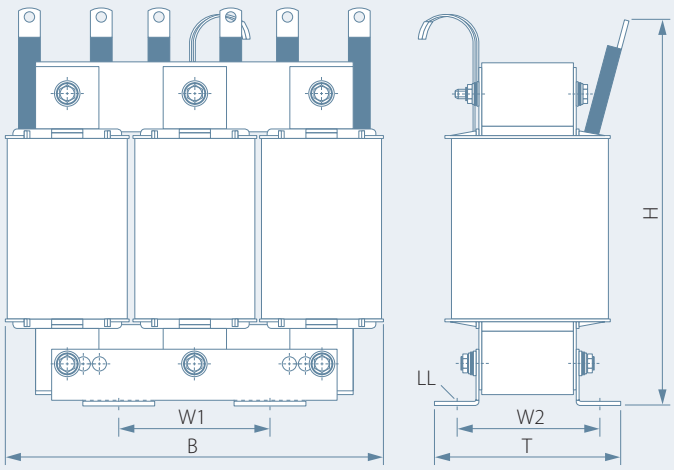

Diagram B

Design with tubular cable lug
Type RK

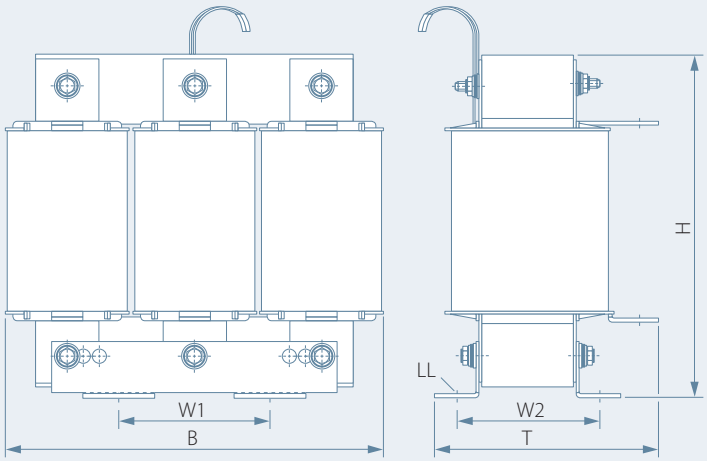

Diagram C

Design with connection angle
Type AW

Not suitable for taking measurements.

EDEPRO0157-2113-1_EN_data sheet multiind 60Hz

KBR Energy Management

multiind Technical details

DEVICE TYPE	multiind basic p = 6 %	multiind basic p = 6 %	multiind basic p = 7 %	multiind basic p = 7 %	multiind basic p = 13 %	multiind basic p = 13 %
Rated voltage	U_n = 380 V	U_n = 440 V	U_n = 230 V	U_n = 480 V	U_n = 380 V	U_n = 440 V
Frequency	60 Hz	60 Hz	60 Hz	60 Hz	60 Hz	60 Hz
Maximum permissible operating voltage	U_n = 380 V ± 10 %	U_n = 440 V ± 10 %	U_n = 230 V ± 10 %	U_n = 480 V ± 10 %	U_n = 380 V ± 10 %	U_n = 440 V ± 10 %
Power	12,5, 25, 50 kvar	12,5, 25, 50 kvar	10, 20 kvar	25, 50 kvar	12,5, 25, 50 kvar	12,5, 25, 50 kvar
Inductivity stability	$L(I_{Lin}) \geq 0{,}95\ L_N$		$L(I_{Lin}) \geq 0{,}95\ L_N$		$L(I_{Lin}) \geq 0{,}95\ L_N$	
Inductivity tolerance	± 3 %		± 3 %		± 3 %	
Overtemperature protection	Break contact at 125 °C (250 V – 50 Hz – 2,5 A)		Break contact at 125 °C (250 V – 50 Hz – 2,5 A)		Break contact at 125 °C (250 V – 50 Hz – 2,5 A)	
Mode of protection	IP 00		IP 00		IP 00	
Protection class	I		I		I	
Ambient temperature	Maximum 40 °C		Maximum 40 °C		Maximum 40 °C	
Cooling type	Natural cooling		Natural cooling		Natural cooling	
Impregnation	Vacuum-impregnated		Vacuum-impregnated		Vacuum-impregnated	
Reactor factor	6 %	6 %	7 %	7 %	13 %	13 %
Resonance frequency	245 Hz	245 Hz	227 Hz	227 Hz	167 Hz	167 Hz
Linearity	1,85 x I_{rated}	1,85 x I_{rated}	1,85 x I_{rated}	1,85 x $I_{rated.}$	1,5 x I_{rated}	1,5 x I_{rated}
Standards	DIN EN 60289 (VDE 0532-289)		DIN EN 60289 (VDE 0532-289)		DIN EN 60289 (VDE 0532-289)	
Designs	Cu = Copper Al = Aluminum L = cable connection AW = connection angle RK = tubular cable lug					

EDEPRO0157-2113-1_EN_data sheet multiind 60Hz

Specifications multiind-basic ... 6%

Reactor factor: **6%** Resonance frequency: **245 Hz**

VOLTAGE V	POWER kvar	TYPE multiind-basic ... 6 %	Cu	Al	INDUCTIVITY mH	RATED CURRENT A	DIMENSIONS H	W	D	W1	W2	LL	CONNECTION L	AW	RK	DIAGRAM	WEIGHT kg	CAPACITY µF	CAPACITOR multicond UHPC or multicond HPC
380V/60Hz	12,5	multiind-basic 380-12,5-6-CU-RK-S-60Hz	x		1,8280	20,3	215	210	109	95	85	9			x	B	13	231	1x 20,0-525-3P
380V/60Hz	25	multiind-basic 380-25,0-6-AL-AW-S-60Hz		x	0,9887	37,6	220	240	145	95	92	9		x		C	17	427	1x 37,0-525-3P
380 V/60Hz	50	multiind-basic 380-50,0-6-CU-RK-S-60Hz	x		0,4749	78	250	240	155	95	105	9			x	B	26	889	1x 17,0-525-3P 2x 30,0-525-3P
440V/60Hz	12,5	multiind-basic 440-12,5-6-CU-RK-S-60Hz	x		2,4403	17,6	215	210	109	95	85	9			x	B	11,8	173	1x 15,0-525-3P
440V/60Hz	25	multiind-basic 440-25,0-6-AL-AW-S-60Hz		x	1,2166	35,4	220	240	145	95	92	9		x		C	20	346,5	1x 30,0-525-3P
440V/60Hz	50	multiind-basic 440-50,0-6-AL-AW-S-60Hz		x	0,6416	67	270	300	180	95	117	9		x		C	33	658	1x 20,0-525-3P 1x 37,0-525-3P

Specifications multiind-basic ... 7%

Reactor factor: **7%** Resonance frequency: **227Hz**

VOLTAGE V	POWER kvar	TYPE multiind-basic ... 7 %	Cu	Al	INDUCTIVITY mH	RATED CURRENT A	DIMENSIONS H	W	D	W1	W2	LL	CONNECTION L	AW	RK	DIAGRAM	WEIGHT kg	CAPACITY µF	CAPACITOR multicond UHPC or multicond HPC
230V/60Hz	10	multiind-basic 230-10-7-CU-RK-S-60Hz	x		1,0661	25	215	210	109	95	85	9			x	B	13,5	462	1x 28,1-440-3P
230V/60Hz	20	multiind-basic 230-20-7-CU-RK-S-60Hz	x		0,5319	50	250	240	129	95	105	9			x	B	22	925,5	1x 20,0-440-3P 1x 36,3-440-3P
480V/60Hz	25	multiind-basic 480-25,0-7-AL-AW-S-60Hz		x	1,7043	32,5	220	240	145	95	92	9		x		C	17	289	1x 25,0-525-3P
480V/60Hz	50	multiind-basic 480-50,0-7-AL-AW-S-60Hz		x	0,9276	60	240	260	167	95	112	9		x		C	25	531	1x 21,0-525-3P 1x 25,0-525-3P

Specifications multiind-basic ... 13%

Reactor factor: **13%** Resonance frequency: **167 Hz**

VOLTAGE V	POWER kvar	TYPE multiind-basic ... 13 %	Cu	Al	INDUCTIVITY mH	RATED CURRENT A	DIMENSIONS H	W	D	W1	W2	LL	CONNECTION L	AW	RK	DIAGRAM	WEIGHT kg	CAPACITY µF	CAPACITOR multicond UHPC or multicond HPC
380V/60Hz	12,5	multiind-basic 380-12,5-13-CU-RK-S-60Hz	x		4,3976	19,8	250	240	105	95	82	9			x	B	16	207,9	1x 18,0-525-3P
380V/60Hz	25	multiind-basic 380-25,0-13-AL-AW-S-60Hz		x	2,1988	39,5	270	300	180	95	117	9		x		C	32	416	2x 18,0-525-3P
380 V/60Hz	50	multiind-basic 380-50,0-13-AL-AW-S-60Hz		x	1,1818	81,3	270	300	180	95	117	9		x		C	33	855	2x 37,0-525-3P
440V/60Hz	12,5	multiind-basic 440-12,5-13-CU-RK-S-60Hz	x		6,0980	16,5	215	210	109	95	85	9			x	B	15	150	1x 13,0-525-3P
440V/60Hz	25	multiind-basic 440-25,0-13-AL-AW-S-60Hz		x	3,0480	33	240	260	167	95	112	9		x		C	24	300	2x 13,0-525-3P
440V/60Hz	50	multiind-basic 440-50,0-13-AL-AW-S-60Hz		x	1,5250	66	270	300	180	95	117	9		x		C	33	658	1x 15,0-525-3P 1x 37,0-525-3P